YASKAWA

YRC1000micro OPTIONS
INSTRUCTIONS

FOR TWIN DRIVE FUNCTION

Upon receipt of the product and prior to initial operation, read these instructions thoroughly, and retain for future reference.

MOTOMAN INSTRUCTIONS

MOTOMAN-□□□ INSTRUCTIONS
YRC1000micro INSTRUCTIONS
YRC1000micro OPERATOR'S MANUAL
YRC1000micro MAINTENANCE MANUAL
YRC1000micro ALARM CODES (MAJOR ALARMS) (MINOR ALARMS)

The YRC1000micro alarm codes above consists of "MAJOR ALARMS" and "MINOR ALARMS".

Please have the following information available when contacting Yaskawa Customer Support:
- System
- Primary Application
- Software Version *(Located on Programming Pendant by selecting: {Main Menu} - {System Info} - {Version})*
  Robot Serial Number *(Located on robot data plate)*
  Robot Sales Order Number *(Located on controller data plate)*

Part Number: 181297-1CD
Revision: 0

Yaskawa Customer Support
- 24-hour Telephone Number: **(937) 847-3200**
  Use for urgent or emergency needs for technical support, service and/or replacement parts
- Routine Technical Inquiries: *techsupport@motoman.com*
  Allow up to 36 hours for response

MANUAL NO.
HW1484518

DANGER

- This manual explains the twin drive function of the YRC1000micro system. Read this manual carefully and be sure to understand its contents before handling the YRC1000micro. Any matter not described in this manual must be regarded as “prohibited” or “improper”.
- General information related to safety are described in “Chapter 1. Safety” of the YRC1000micro INSTRUCTIONS. To ensure correct and safe operation, carefully read “Chapter 1. Safety” of the YRC1000micro INSTRUCTIONS.

CAUTION

- In some drawings in this manual, protective covers or shields are removed to show details. Make sure that all the covers or shields are installed in place before operating this product.
- YASKAWA is not responsible for incidents arising from unauthorized modification of its products. Unauthorized modification voids the product warranty.

NOTICE

- The drawings and photos in this manual are representative examples and differences may exist between them and the delivered product.
- YASKAWA may modify this model without notice when necessary due to product improvements, modifications, or changes in specifications. If such modification is made, the manual number will also be revised.
- If your copy of the manual is damaged or lost, contact a YASKAWA representative to order a new copy. The representatives are listed on the back cover. Be sure to tell the representative the manual number listed on the front cover.

Notes for Safe Operation

Read this manual carefully before installation, operation, maintenance, or inspection of the YRC1000micro.

In this manual, the Notes for Safe Operation are classified as “DANGER”, “WARNING”, “CAUTION”, or “NOTICE”.

DANGER

Indicates an imminently hazardous situation which, if not avoided, will result in death or serious injury. Safety Signs identified by the signal word DANGER should be used sparingly and only for those situations presenting the most serious hazards.

WARNING

Indicates a potentially hazardous situation which, if not avoided, will result in death or serious injury. Hazards identified by the signal word WARNING present a lesser degree of risk of injury or death than those identified by the signal word DANGER.

CAUTION

Indicates a hazardous situation, which if not avoided, could result in minor or moderate injury. It may also be used without the safety alert symbol as an alternative to “NOTICE”.

NOTICE

NOTICE is the preferred signal word to address practices not related to personal injury. The safety alert symbol should not be used with this signal word. As an alternative to “NOTICE”, the word “CAUTION” without the safety alert symbol may be used to indicate a message not related to personal injury.

Even items described as “CAUTION” may result in a serious accident in some situations.
At any rate, be sure to follow these important items.

NOTE

To ensure safe and efficient operation at all times, be sure to follow all instructions, even if not designated as “DANGER”, “WARNING” and “CAUTION".

DANGER

- Before operating the manipulator, make sure the servo power is turned OFF by performing the following operations. When the servo power is turned OFF, the SERVO ON LED on the programming pendant is turned OFF.
  - Press the emergency stop button on the programming pendant or on the external control device, etc.
  - Disconnect the safety plug of the safety fence. (when in the play mode or in the remote mode)

If operation of the manipulator cannot be stopped in an emergency, personal injury and/or equipment damage may result.

Fig. : Emergency Stop Button

- Before releasing the emergency stop, make sure to remove the obstacle or error caused the emergency stop, if any, and then turn the servo power ON.

Failure to observe this instruction may cause unintended movement of the manipulator, which may result in personal injury.

Fig. : Release of Emergency Stop

- Observe the following precautions when performing a teaching operation within the manipulator's operating range:
  - Be sure to perform lockout by putting a lockout device on the safety fence when going into the area enclosed by the safety fence. In addition, the operator of the teaching operation must display the sign that the operation is being performed so that no other person closes the safety fence.
  - View the manipulator from the front whenever possible.
  - Always follow the predetermined operating procedure.
  - Always keep in mind emergency response measures against the manipulator’s unexpected movement toward a person.
  - Ensure a safe place to retreat in case of emergency.

Failure to observe this instruction may cause improper or unintended movement of the manipulator, which may result in personal injury.

- Confirm that no person is present in the manipulator's operating range and that the operator is in a safe location before:
  - Turning ON the YRC1000micro power
  - Moving the manipulator by using the programming pendant
  - Running the system in the check mode
  - Performing automatic operations

Personal injury may result if a person enters the manipulator's operating range during operation. Immediately press an emergency stop button whenever there is a problem. The emergency stop button is located on the right of the programming pendant.

- Read and understand the Explanation of the Warning Labels before operating the manipulator.

DANGER

- In the case of not using the programming pendant, be sure to supply the emergency stop button on the equipment. Then before operating the manipulator, check to be sure that the servo power is turned OFF by pressing the emergency stop button.
  Connect the external emergency stop button to the 4-14 pin and 5-15 pin of the Safety connector (Safety).
- Upon shipment of the YRC1000micro, this signal is connected by a jumper cable in the dummy connector. To use the signal, make sure to supply a new connector, and then input it.

If the signal is input with the jumper cable connected, it does not function, which may result in personal injury or equipment damage.

WARNING

- Perform the following inspection procedures prior to conducting manipulator teaching. If there is any problem, immediately take necessary steps to solve it, such as maintenance and repair.
  - Check for a problem in manipulator movement.
  - Check for damage to insulation and sheathing of external wires.
- Return the programming pendant to a safe place after use.

If the programming pendant is left unattended on the manipulator, on a fixture, or on the floor, etc., the Enable Switch may be activated due to surface irregularities of where it is left, and the servo power may be turned ON. In addition, in case the operation of the manipulator starts, the manipulator or the tool may hit the programming pendant left unattended, which may result in personal injury and/or equipment damage.

Definition of Terms Used Often in This Manual

The MOTOMAN is the YASKAWA industrial robot product.

The MOTOMAN usually consists of the manipulator, the YRC1000micro controller, manipulator cables, the YRC1000micro programming pendant (optional), and the YRC1000micro programming pendant dummy connector (optional).

In this manual, the equipment is designated as follows:

Equipment	Manual Designation
YRC1000micro controller	YRC1000micro
YRC1000micro programming pendant	Programming pendant (optional)
Cable between the manipulator and the controller	Manipulator cable
YRC1000micro programming pendant dummy connector	Programming pendant dummy connector (optional)

Descriptions of the programming pendant keys, buttons, and displays are shown as follows:

Equipment		Manual Designation
Programming Pendant	Character Keys /Symbol Keys	The keys which have characters or symbols printed on them are denoted with [ ]. ex. [ENTER]
	Axis Keys /Number Keys	[Axis Key] and [Numeric Key] are generic names for the keys for axis operation and number input.
	Keys pressed simultaneously	When two keys are to be pressed simultaneously, the keys are shown with a “+” sign between them, ex. [SHIFT]+[COORD]
	Mode Key	Three kinds of modes that can be selected by the mode key are denoted as follows: REMOTE, PLAY, or TEACH
	Button	Three buttons on the upper side of the programming pendant are denoted as follows: HOLD button START button EMERGENCY STOP button
	Displays	The menu displayed in the programming pendant is denoted with { }. e.g. {JOB}
PC Keyboard		The name of the key is denoted. e.g. Ctrl key on the keyboard

Description of the Operation Procedure

In the explanation of the operation procedure, the expression "Select • • • " means that the cursor is moved to the object item and [SELECT] is pressed, or that the item is directly selected by touching the screen.

Registered Trademark

In this manual, names of companies, corporations, or products are trademarks, registered trademarks, or brand names for each company or corporation. The indications of (R) and TM are omitted.

Contents

1 Outline 1-1

2 Applicable Types 2-1

2.1 Station Axis 2-1

2.2 Base Axis 2-2

3 Operation 3-1

3.1 Axis Operation 3-1

3.1.1 Twin Motion Mode 3-2

3.1.2 Single Motion Mode 3-3

3.1.3 Precautions 3-3

4 Setting Parameters 4-1

5 Status Display 5-1

6 Precautions 6-1

6.1 Precautions when selecting Motor 6-1

6.2 Precautions when Setting External Axes 6-1

6.2.1 Setting Mechanical Specifications 6-1

6.2.2 Setting Motor Specifications 6-1

6.2.3 Setting the Rotating Direction 6-1

6.3 Setting the Home Position 6-2

6.4 Precautions upon Application with Coordinated Motion 6-2

6.4.1 Coordinated Motion with TWIN-2 6-2

1 Outline

When configurating the external axes (base or station axes) in the YRC1000micro and using a single motor to control an axis with a heavy load applied during an operation, a large-capacity motor with sufficient capacity and torque is required.

In this case, the external axis becomes very large and requires a wide space for equipment installation.

A system, where a external axis with a heavy load is operated by two motors may be built to provide the necessary motor capacity and torque.

In such a system, the two motors must be operated at the same time, or the system and external axes may be damaged.

Use the twin drive function to operate the motor on the slave axis side at the same time as the external master axis during teaching.

This function economizes on system space and obtains sufficient motor power.

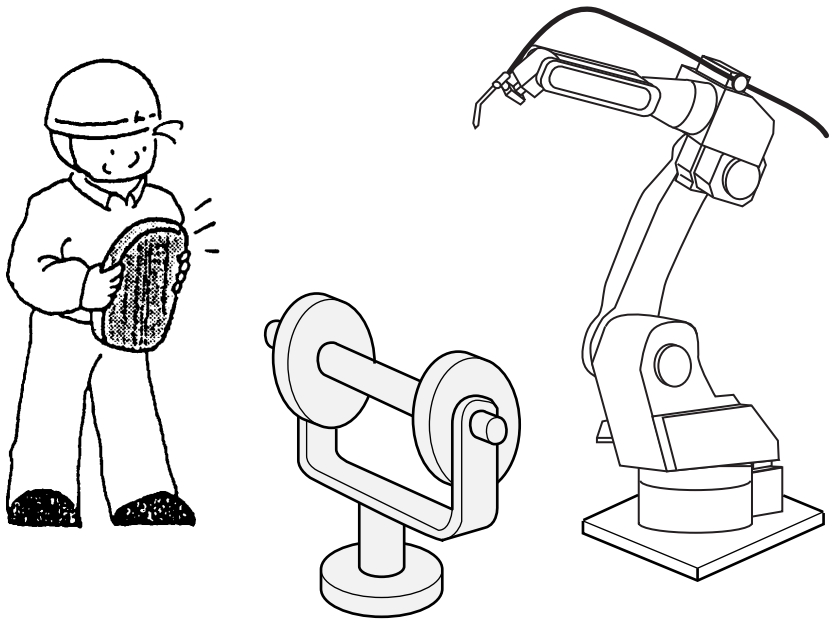

2 Applicable Types

2.1 Station Axis

The following axis types are applicable as the station axis with the twin drive axis. Select the axis type in the setting of control group of system configuration.

> SUPPLE -MENT
> For details of selecting axis type, refer to “Chap.12.3.2 Station Axis Setting” in “YRC1000micro INSTRUCTIONS” (RE-CTO-A222).

Station type	Configuration			Remarks
	The number of station axes	Master axis	Slave axis	
TWIN -3A (TDT3A)	3 axes	Second axis	Third axis	See *fig. 2-1(a)*
TWIN -3B (TDT3B)	3 axes	First axis	Third axis	See *fig. 2-2(a)*
TWIN -2 (TDT2)	2 axes	First axis	Second axis	See *fig. 2-3(a)*

Fig. 2-1(a): TWIN-3A

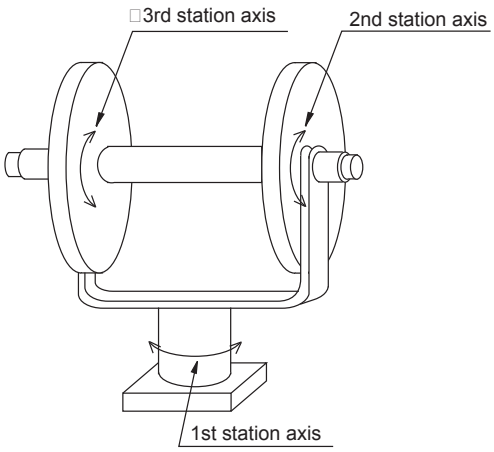

Fig. 2-2(a): TWIN-3B

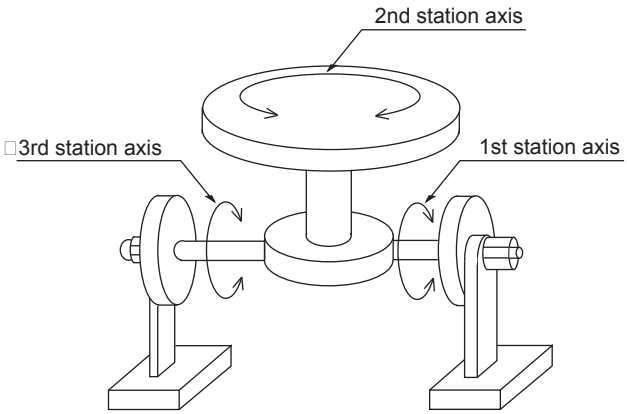

Fig. 2-3(a): TWIN-2

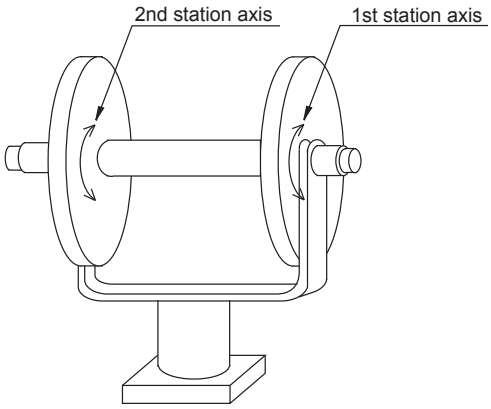

2.2 Base Axis

Following axis types are applicable as the base axis with the twin drive axis. Select the axis type in the setting of control group of system configuration.

SUPPLE -MENT

For details of selecting axis type, refer to “Chap.12.3.1 Base Axis Setting” in “YRC1000micro INSTRUCTIONS” (RE-CTO-A222).

Base axis type	Configuration			Remarks
	The number of base axes	Master axis	Slave axis	
TW-X	2 axes	First axis	Second axis	X-axis of RECT-X is the twin drive axis.
TW-Y				Y-axis of RECT-Y is the twin drive axis.
TW-Z				Z-axis of RECT-Z is the twin drive axis.
TW-XY	3 axes	First axis or second axis	Third axis	X- or Y-axis of RECT-XY is the twin drive axis.
TW-XZ				X- or Z-axis of RECT-XZ is the twin drive axis.
TW-YZ				Y- or Z-axis of RECT-YZ is the twin drive axis.
TW-XYZ	4 axes	First axis, second axis, or third axis	Fourth axis	X-, Y-, or Z-axis of RECT-XYZ is the twin drive axis.

3 Operation

When the external axis with the twin drive is selected for the axis operation, the twin-driven axes (master axis and slave axis) can be operated at the same time by a single instruction.

External axis operation and teaching can be easily performed when teaching.

During playback, the axes move according to the taught job data.

3.1 Axis Operation

When the external axis with the twin drive is selected for the axis operation, the following motion is performed.

For the external axis with the twin drive, press the master axis key, and the slave axis and the master axis move at the same time.

However, the external input signal specified by the parameters restricts the axis as outlined in the following table.

External input signal	ON	Single motion mode
	OFF	Twin motion mode

The following describes each mode.

3.1.1 Twin Motion Mode

When using the twin drive, the axes can move in twin motion mode.

When the specified external input status is OFF, the axes move in the twin (concurrent) motion mode.

[Example] For TWIN-2

Press the 1st axis key to move the 2nd axis and the 1st axis at the same time.
In this case, no axis moves when the 2nd axis key is pressed.

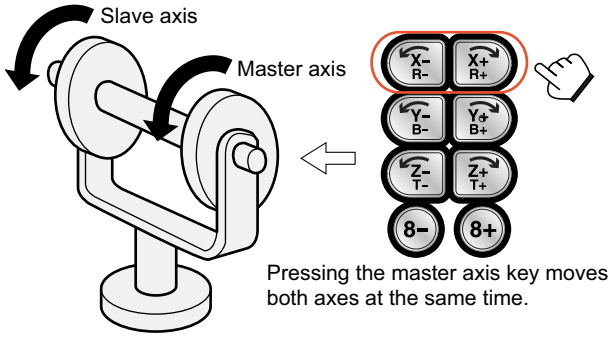

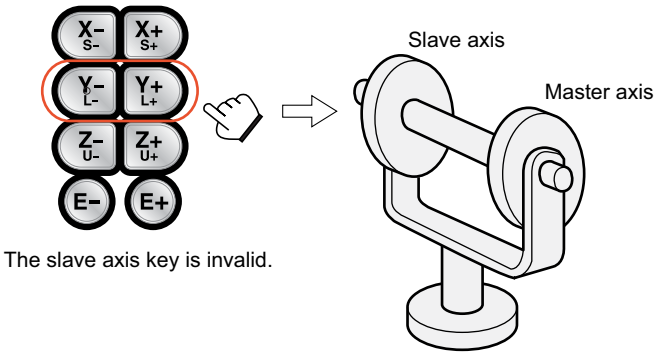

3.1.2 Single Motion Mode

In this mode, the master axis and the slave axis move individually.

When the specified external input status is ON, each axis moves in a single motion.

[Example] For TWIN-2

Press the 1st axis key or the 2nd axis key to move the corresponding axis only.

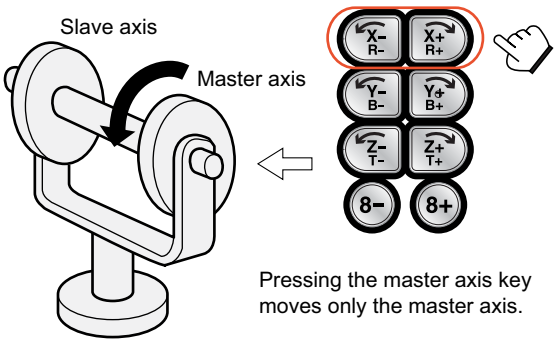

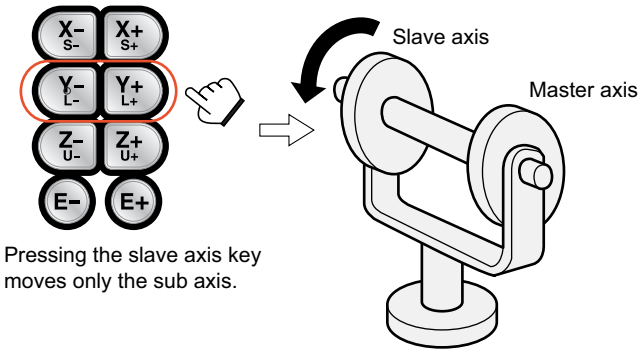

3.1.3 Precautions

Select either the twin motion mode or the single motion mode by external input before starting the axis operation.

The motion mode does not change when the external input status is changed while an axis key is pressed.

The motion mode is determined according to the external input status that exists when the axis key is pressed, not after.

4 Setting Parameters

In the twin drive, the status of external general-purpose input signal determines the mode as the twin motion or single motion.

The following parameters specify the general-purpose input numbers.

Parameter	Contents	
S4C254	General-purpose input number specification in the twin drive	Base 1
S4C255		Base 2
S4C262		Station 1
S4C263		Station 2
S4C264		Station 3

When general-purpose input numbers are not set to the above parameters (when “0” is set) for the station axes with twin drive function, the twin motion is the default mode.

5 Status Display

The application status of the twin drive function can be confirmed.

1. Select {ROBOT} from the menu.
2. Select {TWIN DRIVE}.
   – The twin drive display appears.

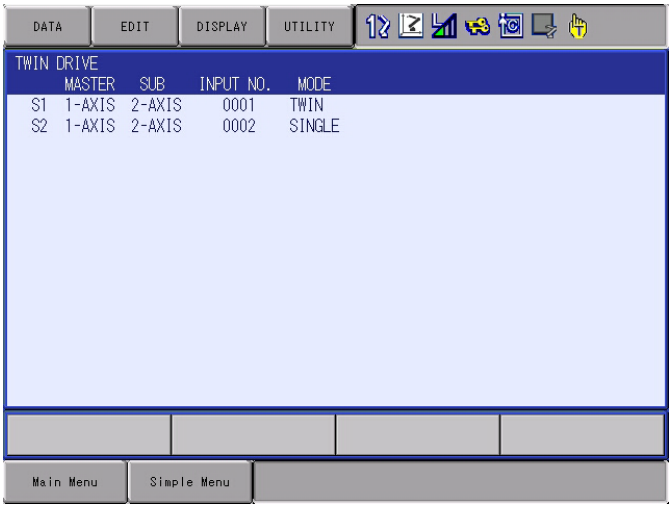

MASTER : The number of the master axis appears when the twin drive function is used.

SUB : The number of the slave axis appears when the twin drive function is used.

INPUT NO. : The general-purpose input number set for the parameter appears.

When there is not set general-purpose input number, “⌈- - -⌋” appears.

MODE : The external input signal status appears.

“TWIN” : The specified general-purpose input is OFF. The twin (concurrent) motion is possible.

“SINGLE” : The specified general-purpose input is ON. The single motion is possible.

6 Precautions

Observe the following precautions when using the twin drive.

6.1 Precautions when selecting Motor

When using the twin drive, both twin-driven axes have to move in the same way and the same level for both axis operation and playback.

Use the same motors for the twin-driven axes.

6.2 Precautions when Setting External Axes

To use the twin drive function, the external axes must be in maintenance mode.

Note the following precautions when setting the external axes.

For operation methods in the maintenance mode, refer to “YRC1000micro INSTRUCTIONS” (RE-CTO-A222).

6.2.1 Setting Mechanical Specifications

When setting the station axis, enter the following data for the mechanical specifications.

- MOTION RANGE (+)
- MOTION RANGE (-)
- REDUCTION RATIO (NUMER)
- REDUCTION RATIO (DENOM)

When using the twin drive, both twin-driven axes have to move in the same way and the same level for both axis operation and playback. Set the same condition data for both axes.

6.2.2 Setting Motor Specifications

When setting a station axis, enter the following data for the motor specifications.

- ROTATION DIRECTION (NORMAL/REVERSE)
- MAX. RPM
- ACCELERATION TIME
- INERTIA RATIO

When using the twin drive function, both twin-driven axes have to move in the same way and the same level for both axis operation and playback. Set the same condition data for “MAX. RPM”, “ACCELERATION TIME”, and “INERTIA RATIO” of both axes.

6.2.3 Setting the Rotating Direction

When using the twin drive, specify the same motor rotating direction for both twin-driven axes. Specifying a different direction for each axis may damage a jig and break down the system.

Before using the twin drive, confirm the rotating direction of the twin-driven axes to set the correct rotating direction.

6.3 Setting the Home Position

Operate the two station axes configured for the twin drive at the same time and teach the home position so that the two axes have the same “0” position.

Because the two axes have the same “0” pulse position, axis operation and playback can be performed with the same pulse value.

6.4 Precautions upon Application with Coordinated Motion

The station coordinated function can be used as an option. The following restrictions apply for the station axes with the twin drive.

6.4.1 Coordinated Motion with TWIN-2

When the robot moves in a coordinated motion using TWIN-2, the coordinated motion is applied to the 1st station axis. The 2nd station axis and the 1st station axis move in twin drive.

Calibrate the 1st station axis only.

The coordinated motion is not valid for the 2nd station axis.

YRC1000micro OPTIONS
INSTRUCTIONS

FOR TWIN DRIVE FUNCTION

HEAD OFFICE
2-1 Kurosakishiroishi, Yahatanishi-ku, Kitakyushu 806-0004, Japan
Phone +81-93-645-7703 Fax +81-93-645-7802

YASKAWA America Inc. (Motoman Robotics Division)
100 Automation Way, Miamisburg, OH 45342, U.S.A.
Phone +1-937-847-6200 Fax +1-937-847-6277

YASKAWA Europe GmbH（Robotics Divsion）
Yaskawastrasse 1, 85391 Allershausen, Germany
Phone +49-8166-90-100 Fax +49-8166-90-103

YASKAWA Nordic AB
Verkstadsgatan 2, Box 504 ,SE-385 25 Torsas, Sweden
Phone +46-480-417-800 Fax +46-486-414-10

YASKAWA Electric (China) Co., Ltd.
22F, One Corporate Avenue, No.222, Hubin Road, Huangpu District, Shanghai 200021, China
Phone +86-21-5385-2200 Fax ＋86-21-5385-3299

YASKAWA SHOUGANG ROBOT Co. Ltd.
No7 Yongchang North Road, Beijing E&T Development Area, China 100176
Phone +86-10-6788-2858 Fax +86-10-6788-2878

YASKAWA India Private Ltd. (Robotics Division)
#426, Udyog Vihar, Phase- IV, Gurgaon, Haryana, India
Phone +91-124-475-8500 Fax +91-124-475-8542

YASKAWA Electric Korea Corporation
35F, Three IFC, 10 Gukjegeumyung-ro, Yeongdeungpo-gu, Seoul, Korea 07326
Phone +82-2-784-7844 Fax +82-2-784-8495

YASKAWA Electric Taiwan Corporation
12F, No.207, Sec. 3, Beishin Rd., Shindian District, New Taipei City 23143, Taiwan
Phone +886-2-8913-1333 Fax +886-2-8913-1513

YASKAWA Electric (Singapore) PTE Ltd.
151 Lorong Chuan, #04-02A, New Tech Park, Singapore 556741
Phone +65-6282-3003 Fax +65-6289-3003

YASKAWA Electric (Thailand) Co., Ltd.
59,1st-5th Floor, Flourish Building, Soi Ratchadapisek 18,Ratchadapisek Road,
Huaykwang, Bangkok 10310, THAILAND
Phone +66-2-017-0099 Fax +66-2-017-0199

PT. YASKAWA Electric Indonesia
Secure Building-Gedung B Lantai Dasar & Lantai 1 Jl. Raya Protokol Halim Perdanakusuma,
Jakarta 13610, Indonesia
Phone +62-21-2982-6470 Fax +62-21-2982-6741

Specifications are subject to change without notice
for ongoing product modifications and improvements.

YASKAWA

YASKAWA ELECTRIC CORPORATION

© Printed in Japan July 2017 17-07

MANUAL NO.
HW1484518